EUROfase HEATING

FOR MODELS:
EF39FMPF, EF61FMPF

FLUSH MOUNT KIT INSTALLATION MANUAL

Intertek

PLEASE SAVE THIS MANUAL FOR FUTURE REFERENCE.

READ THIS MANUAL CAREFULLY.
SEE INSIDE COVER FOR IMPORTANT INFORMATION ABOUT THIS MANUAL.
KEEP INSTRUCTION WITH APPLIANCE FOR FUTURE REFERENCE.

Version EFIM04222024

PLEASE READ ALL INSTRUCTIONS PRIOR TO INSTALLING THE FLUSH MOUNT KIT OR USING HEATER.

This unit may cause a shock or possible ignition if service is attempted without first disconnecting its power source.

Keep electrical cords, drapery, furnishings and other combustible materials at least 3.3ft (1m) from the heater's front fascia and away from sides and rear.

A LICENSED ELECTRICIAN IS REQUIRED TO INSTALL THIS PRODUCT.

GOOD TO KNOW!

For optimal heater performance and longevity, a 15 minute cool down period is recommended after 4 hours of continuous usage.

WARNING CHECKLIST:

- The flush mount kit is not suitable for use with ceiling mount and wall mount applications
- only utilize the standard grill provided with the heater for flush mount installation applications
- The Eurofase Heating decorative cover is incompatible with this flush mount installation
- Ensure that the front fascia of the heater body faces downward and aligns flush with the finished ceiling
- Installation of the heater and flush mount kit is not suitable for pitched angles
- The flush mount kit is only suitable for flat, non-sloped ceiling applications
- Install the accessible junction box on the outer portion of the sealed drywall pocket
- Required to use 5/8" Type X drywall
- Required to use the supplied 4-foot hi-temp fixture whip and hi-temp ceramic wire nuts
- Extended length hi-temp fixture whips are available. Please contact Eurofase Heating or your distributor for purchasing information

EUROfase HEATING

Note: Eurofase Heating reserves the right to make changes to specifications, parts, components and equipment without prior notification. This Installation, operation and service manual may not be reproduced in any form without prior written consent from Eurofase Heating.

Contents

WARNINGS ..... Page 2

GETTING STARTED ..... Page 4

INSTALLATION INSTRUCTIONS ..... Page 5

Step 1: Installation of the fire retardant drywall pocket ..... Page 5

Step 2: Establishing an electrical connection ..... Page 6

Step 3: Install the flush mount frame into the drywall pocket ..... Page 7

Step 4: Completing an electrical connection ..... Page 8

Step 5: Install heater into the flush mount frame ..... Page 9

Step 6: Decorative trim ..... Page 11

Getting Started

The flush mount kit is specifically engineered to be compatible with all EF heater series. Eurofase Heating provides two frame sizes: a 39-inch and a 61-inch, designed to accommodate heaters ranging from 1500W to 6000W watts.

For optimal performance, select an area with a flat ceiling and a minimum of 2-inch x 8-inch studs. During installation, ensure that the heater is positioned in a manner where the unit faces directly downward when recessed, and is positioned away from any ceiling fan or light fixtures.

2 x 8 STUDS MINIMUM

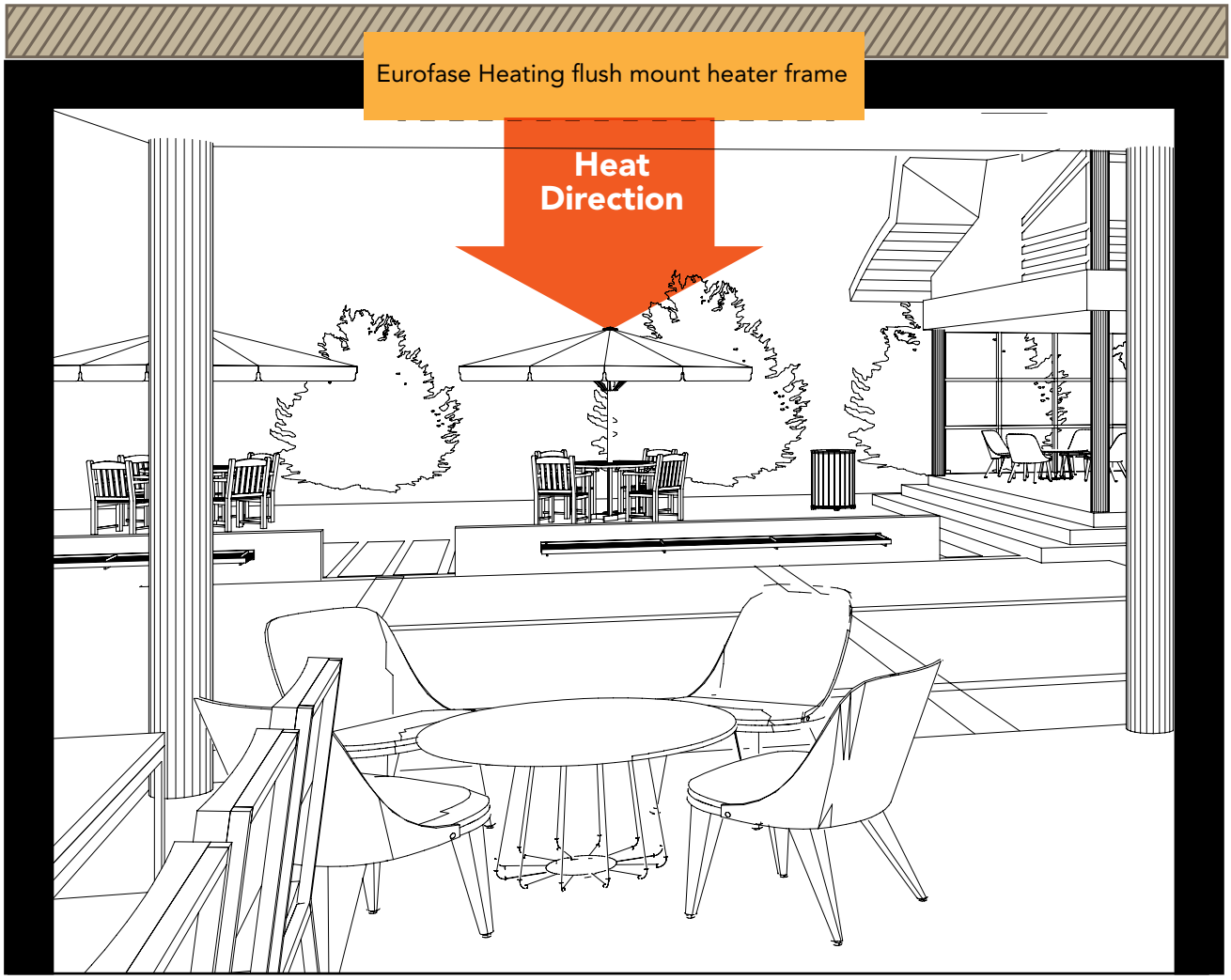

Certain components of this product can reach high temperatures and may cause burns. It is important to exercise caution, especially in areas where children and vulnerable individuals are present.

CLEARANCE GUIDELINES

STEP 1: Installation of the fire-retardant drywall pocket

The initial step in installing your recessed heater is to install a one-hour rated fire-retardant drywall (also known as Type X) to line the pocket. This will help contain the heat generated by the unit.

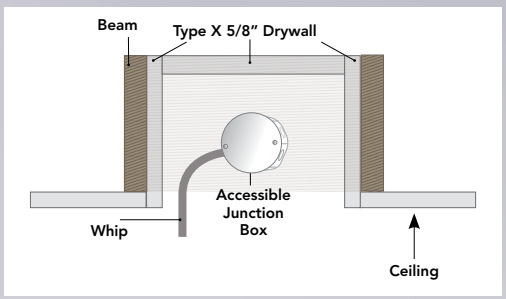

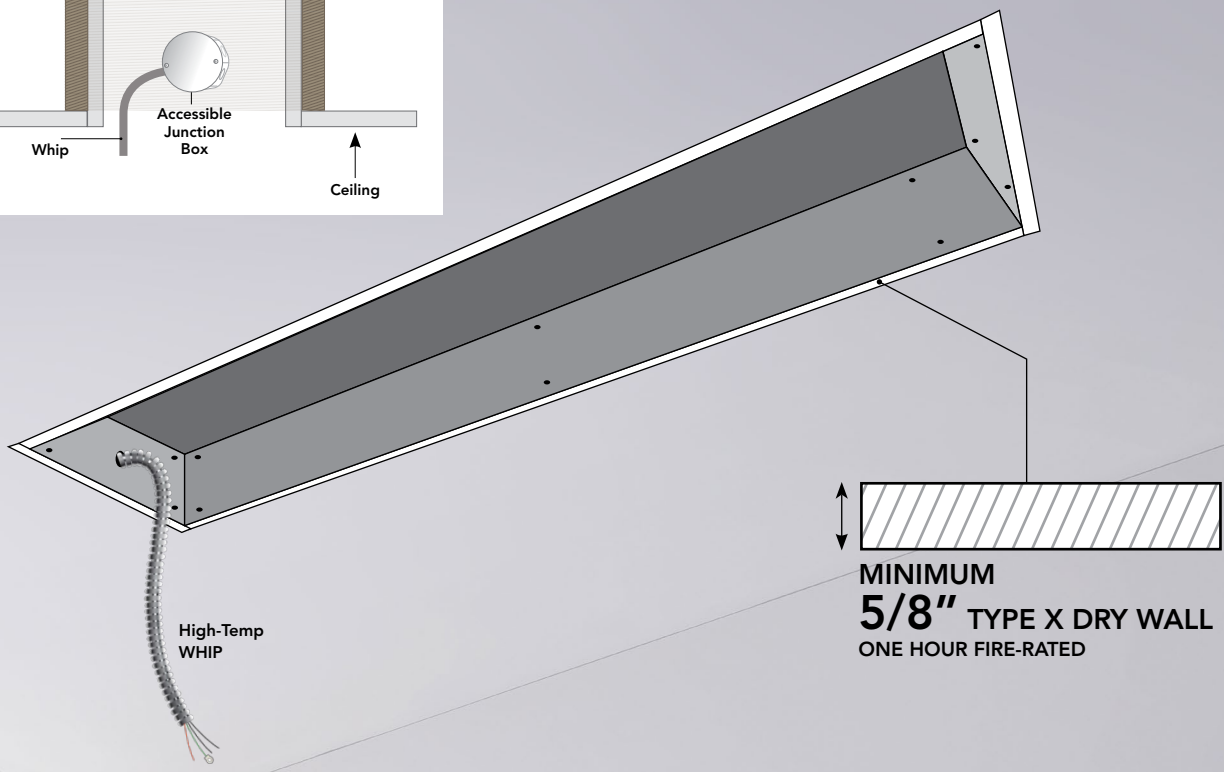

* Were you aware that you can order a prefabricated fire-rated box and skip the framing work altogether?

FIRE RATED BOX 39

FIRE RATED BOX 61

39" FLUSH MOUNT FRAME

- To accommodate a 39-inch heater, the finished opening should measure 43 3/4 x 12 inches.

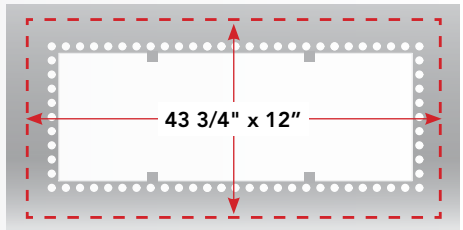

61" FLUSH MOUNT FRAME

- To accommodate a 61-inch heater, the finished opening should measure 65 5/8 x 12 inches.

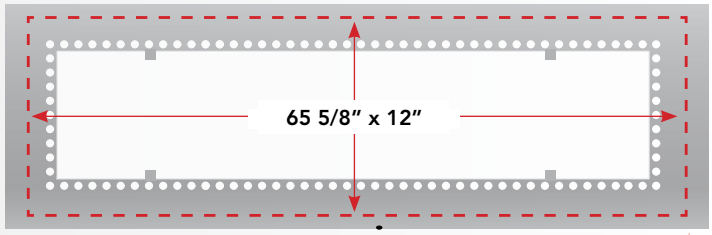

STEP 2: Establishing an electrical connection

After framing the pocket, mount the junction box on the outside of the pocket, and run all necessary wires from the power source. The location for mounting the junction box should comply with your local building codes.

Included in your flush mount kit is a four-foot (48") high-temperature whip, complete with high-temperature wires and wire nuts. This will be used to connect the outside of the junction box to the J-box on the heater.

To connect the two, drill a hole into the upper half of the fire-rated box, and run the whip from the outside of the junction box into the pocket. Following this step, you will be ready to establish the final electrical connection based on our wiring diagram.
Please contact your distributor if longer lengths of high-temperature whips are required; they are available for purchase ranging from 10 feet up to 75 feet in length.

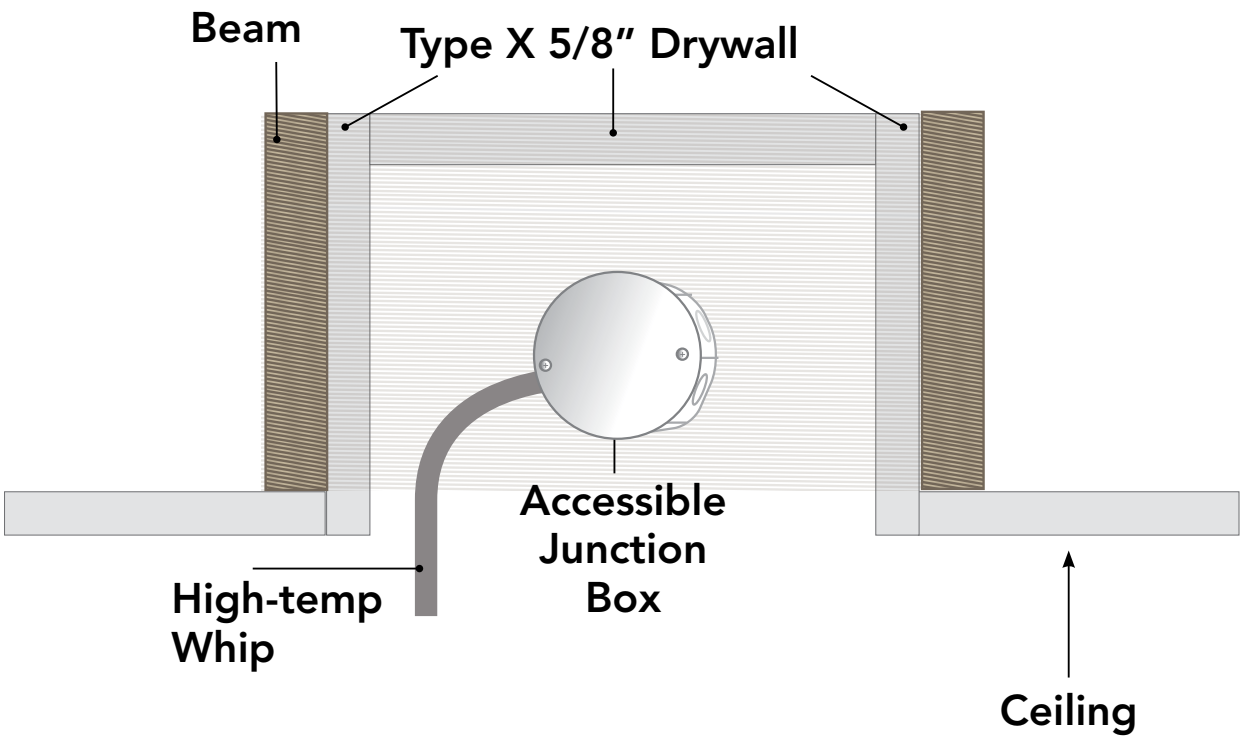

Please establish the electrical connection according to standard safety codes.

STEP 3: Install the flush mount frame into the drywall pocket

The two most common ways the flush mount frame can be installed into the fire-retardant pocket are as follows:

1) Drill through the internal flanges and secure it to the inside of the pocket with wood screws that are a minimum of 2 ½ inches. This will provide the frame with the cleanest look if you opt not to cover the frame. It's important not to tighten the screws too much, as this may cause the frame to buckle.

2) Use wood screws to drill through the faceplate, attaching it to the substructure. Once the frame is mounted, you can choose to leave all 4 inches of the trim exposed or cover it with a decorative ceiling, using materials such as drywall, plaster, stucco, or tongue-and-groove wood. If you opt to create a decorative ceiling, leave a ½ inch clearance between the decorative material and the ventilation holes that run along the inside of the 4-inch flange.

Please ensure there is a 1/2 inch clearance between the decorative material and the ventilation holes that run along the inside of the 4-inch flange.

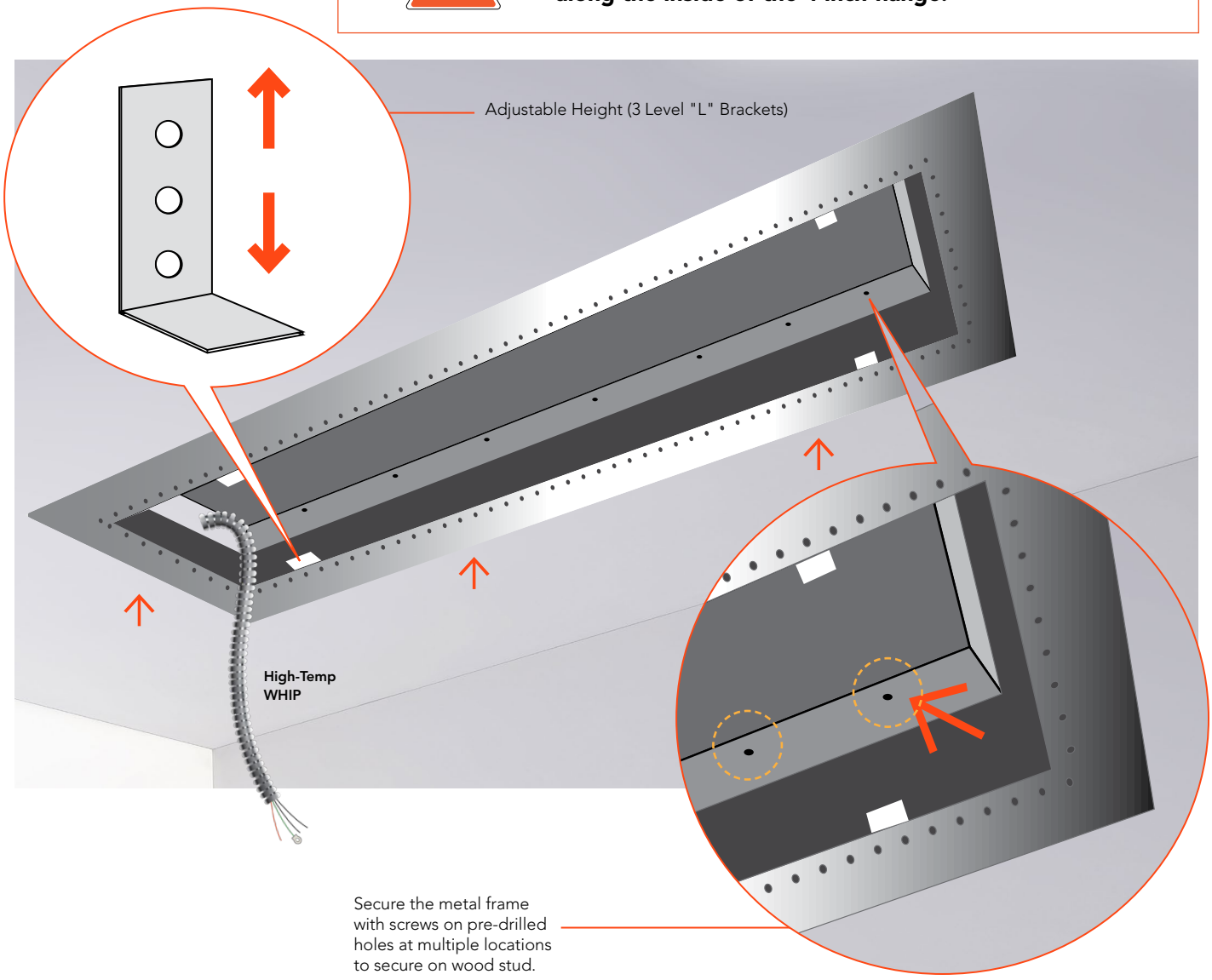

STEP 4: Decorative Trim

Decorative trims are compatible with our heaters. Please ensure there is a minimum 1/2 inch clearance to allow for heat dissipation through the ventilation holes.

STEP 5: Completing the electrical connection

Refer to our wiring diagram on how to connect all wires to the heater's junction box, make your final electrical connection by attaching the whip from the outside junction box to the heater's J-box, using the supplied high-temperature wire nuts. Secure the junction box cover before installing the heater into the metal frame.

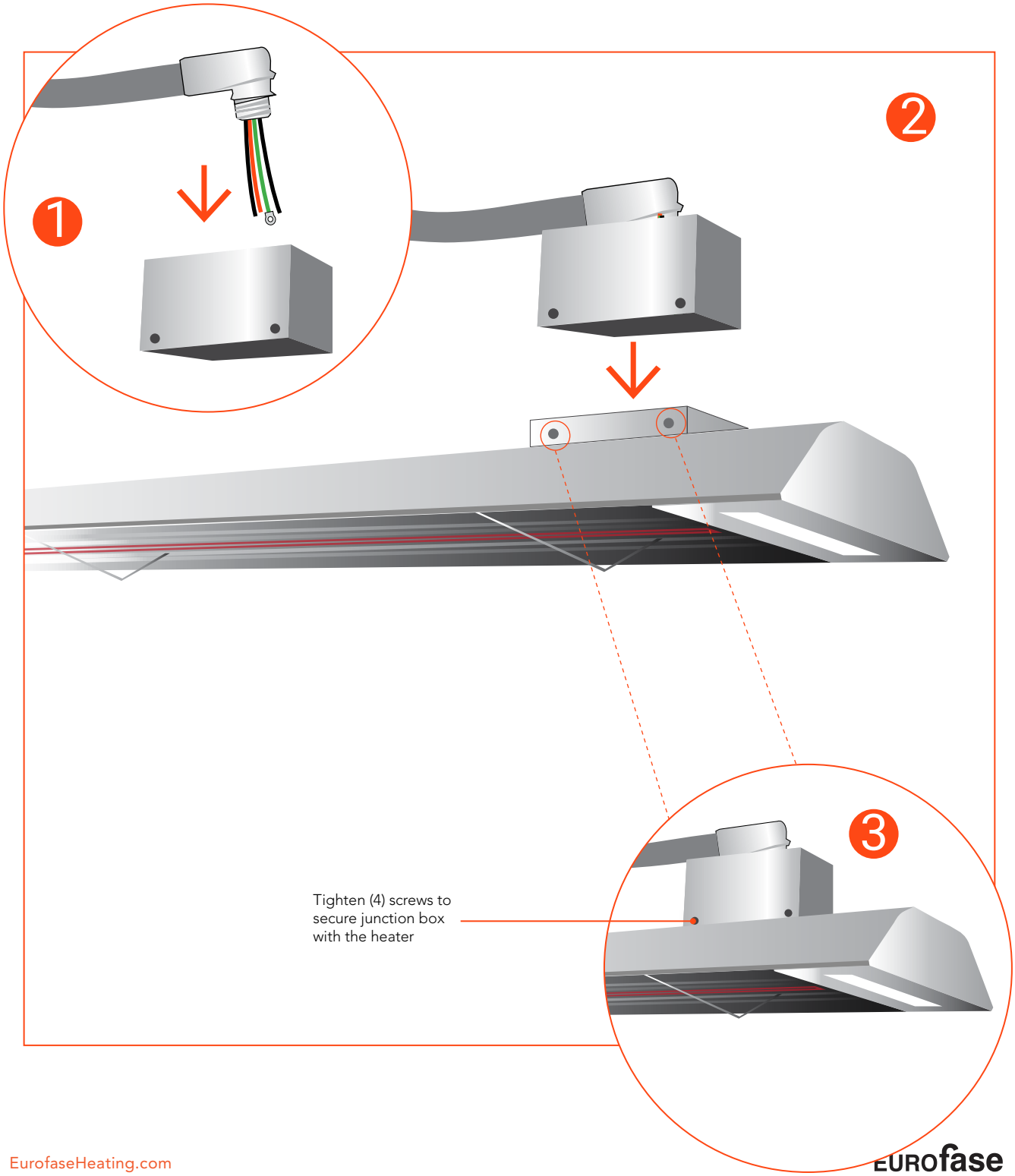

STEP 6: Install heater into the flush mount frame

Lift the heater between and above the brackets so that it rests upon them, making any minor adjustments as needed.
The bracket has vertical mobility, allowing the heater to be raised and lowered to match the height with the finished ceiling.

Once the brackets have been adjusted to the appropriate level, you can proceed with making the final wiring connections.

The installation is now complete, and you are ready to enjoy the comfort of your newly installed heater all year round.

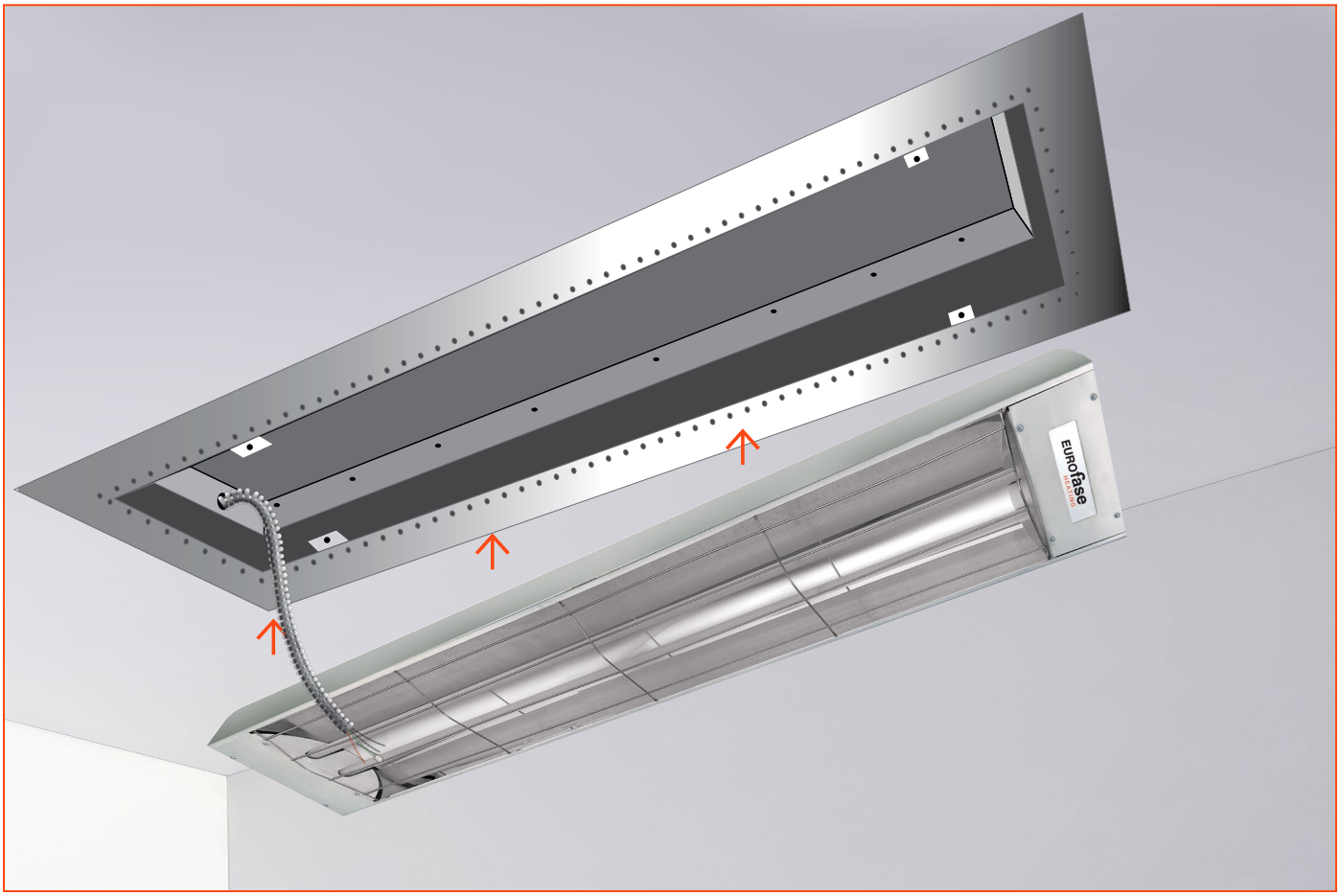

* If you have any further questions or need additional support, please visit our website at www.EurofaseHeating.com or contact us at info@EurofaseHeating.com.

The heater is suspended by gravity, resting on adjustable L brackets within the flush mount bracket.

Installers can securely attach the heater to the "L" brackets by carefully drilling screws into the frame.

BEFORE

AFTER

POWERED

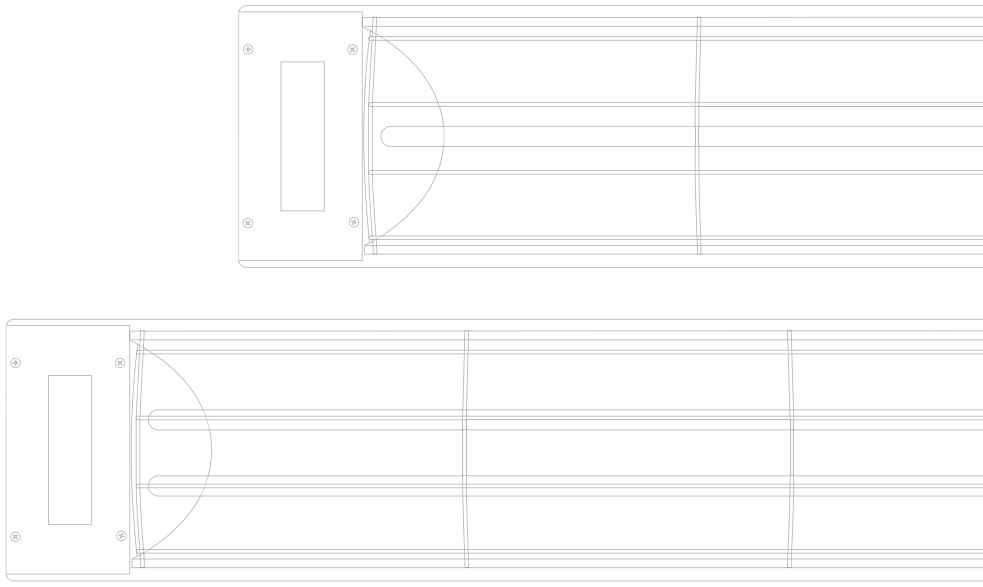

We are incredibly proud of our quality and craftsmanship and offer an industry-leading warranty on all our products. If your Eurofase Heating products ever disappoint, simply give us a shout and we will repair or replace our products within 3 years from the date of purchase.

Eurofase CANADA
33 West Beaver Creek,Richmond Hill,
ON L4B 1L8,

Eurofase USA
2100 Stemmons Freeway, Suite 4002,
Dallas, TX 75207

EurofaseHeating.com
Email: info@EurofaseHeating.com
Tel: 1-833-346-6682